E-Sound

Model:
DX9050

Picture:

Frequency:

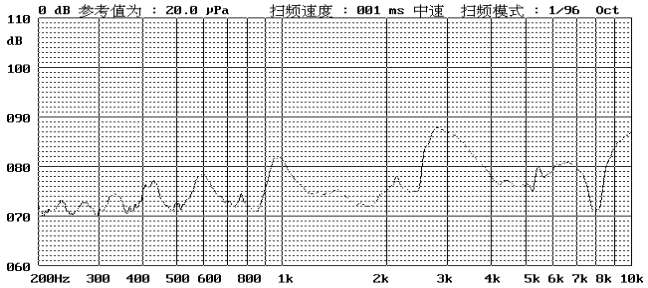

Specification:

Model	DX9050		
Rated Voltage	1.5 V	3.0 V	5.0 V
Operating Voltage	1-2 V	2-4 V	4-6 V
Sound Output at 10cm (dB)	86 dB	87 dB	88 dB
Current consumption	80 mA	70 mA	70 mA
Operating Temperature (℃)	-20~+70℃	-20~+70℃	-20~+70℃
Storage Temperature (℃)	-30~+80℃	-30~+80℃	-30~+80℃

Dimensions:

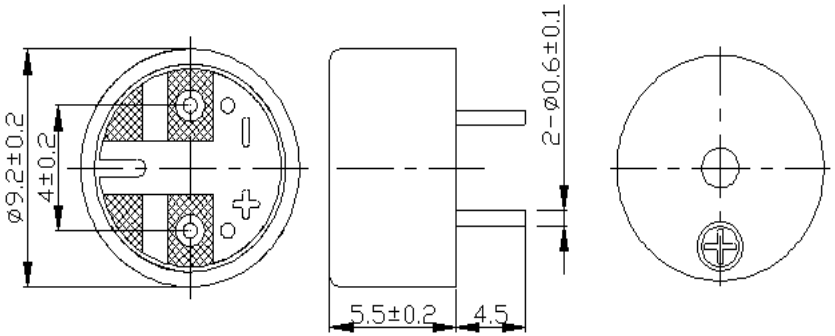

info@duoxin.com Tel:86-519-83993358 www.duoxin.com