E-Sound

Model:
DXP23095W(Self Drive)

Picture:

Frequency:

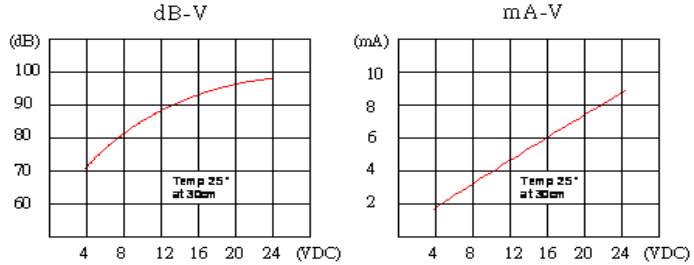

Specification:

Model	DXP23095W(Self Drive)
Rated Voltage	12 V
Operating Voltage	3-15 V
Sound Output at 10cm (dB)	85 dB
Current consumption	10 mA
Operating Temperature (℃)	-20~+60 ℃
Storage Temperature (℃)	-30~+70 ℃
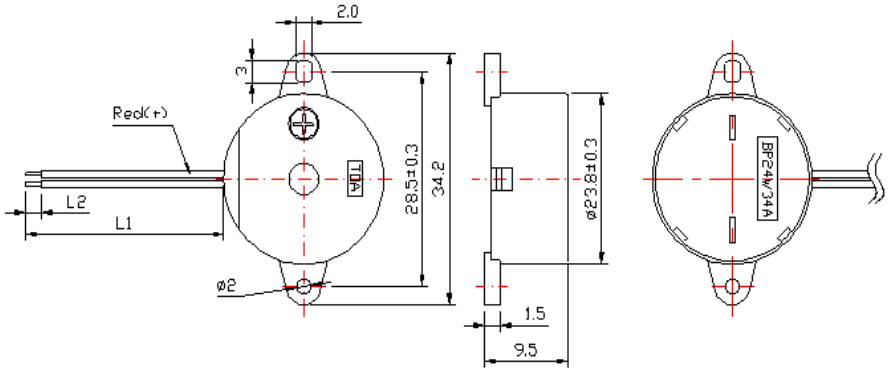
Dimensions: